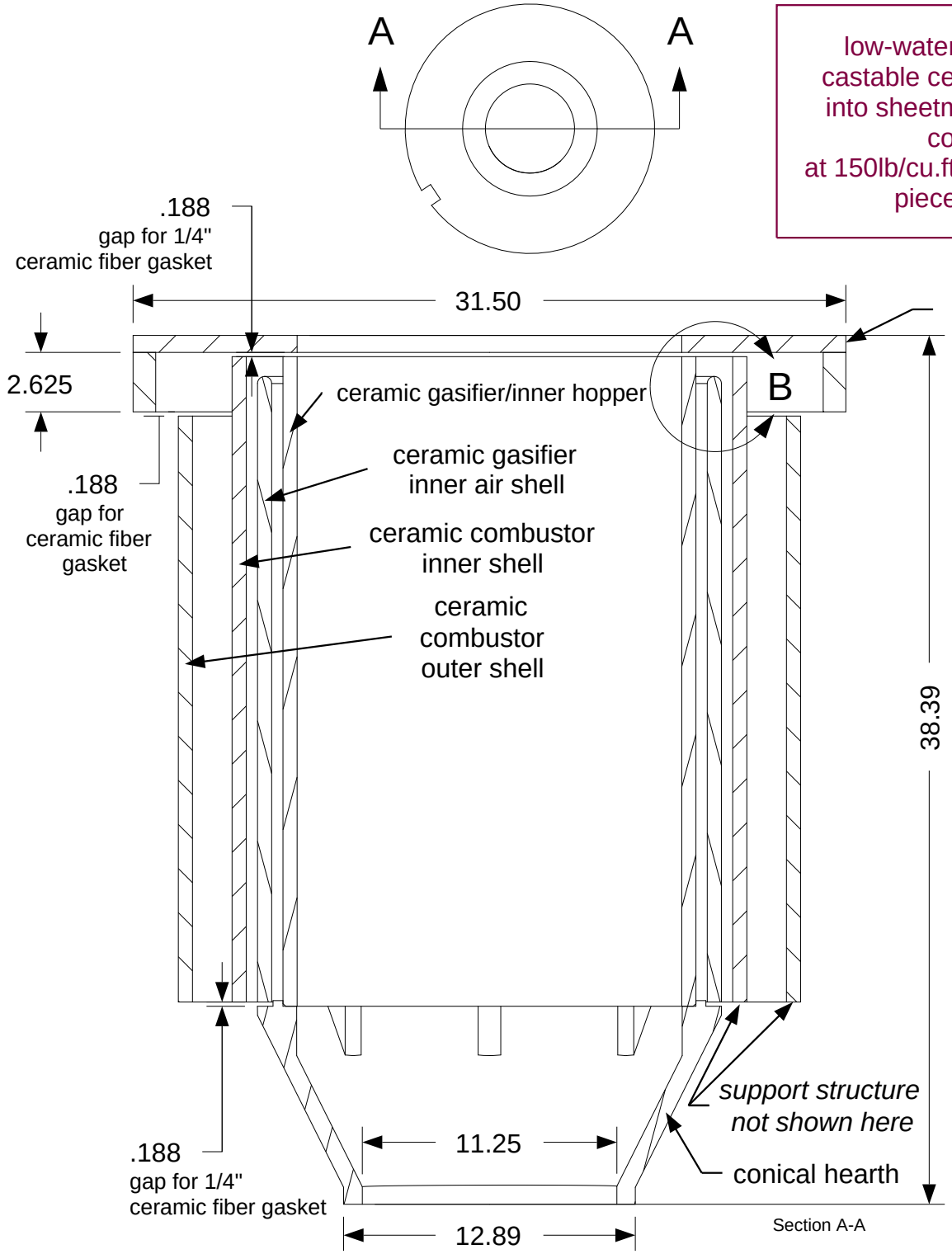

low-water low-cement vibrating castable ceramic is vibrated evenly into sheetmetal molds with a small concrete stinger.
at 150lb/cu.ft., total weight of ceramic pieces is around 496lb

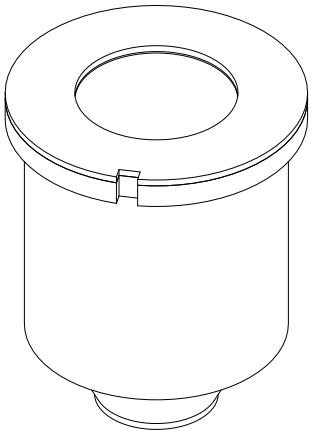

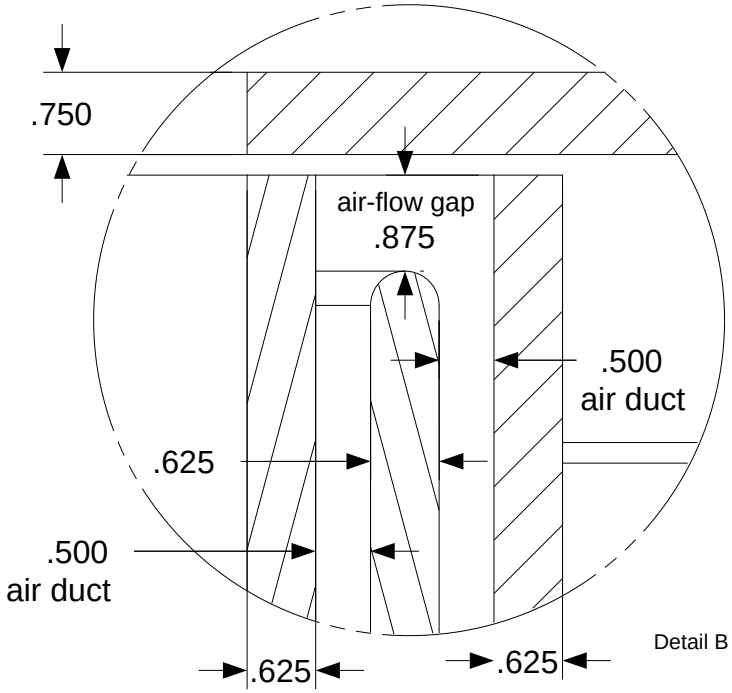

DESCRIPTION - NOTES			
use low-water low-cement vibrating castable ceramic rated for 3000°F			
SIZE A	DATE 12/10/11	DWG NAME Refractory Ceramic Parts.icd	REV
SCALE	drawn by Larry Dobson		SHEET

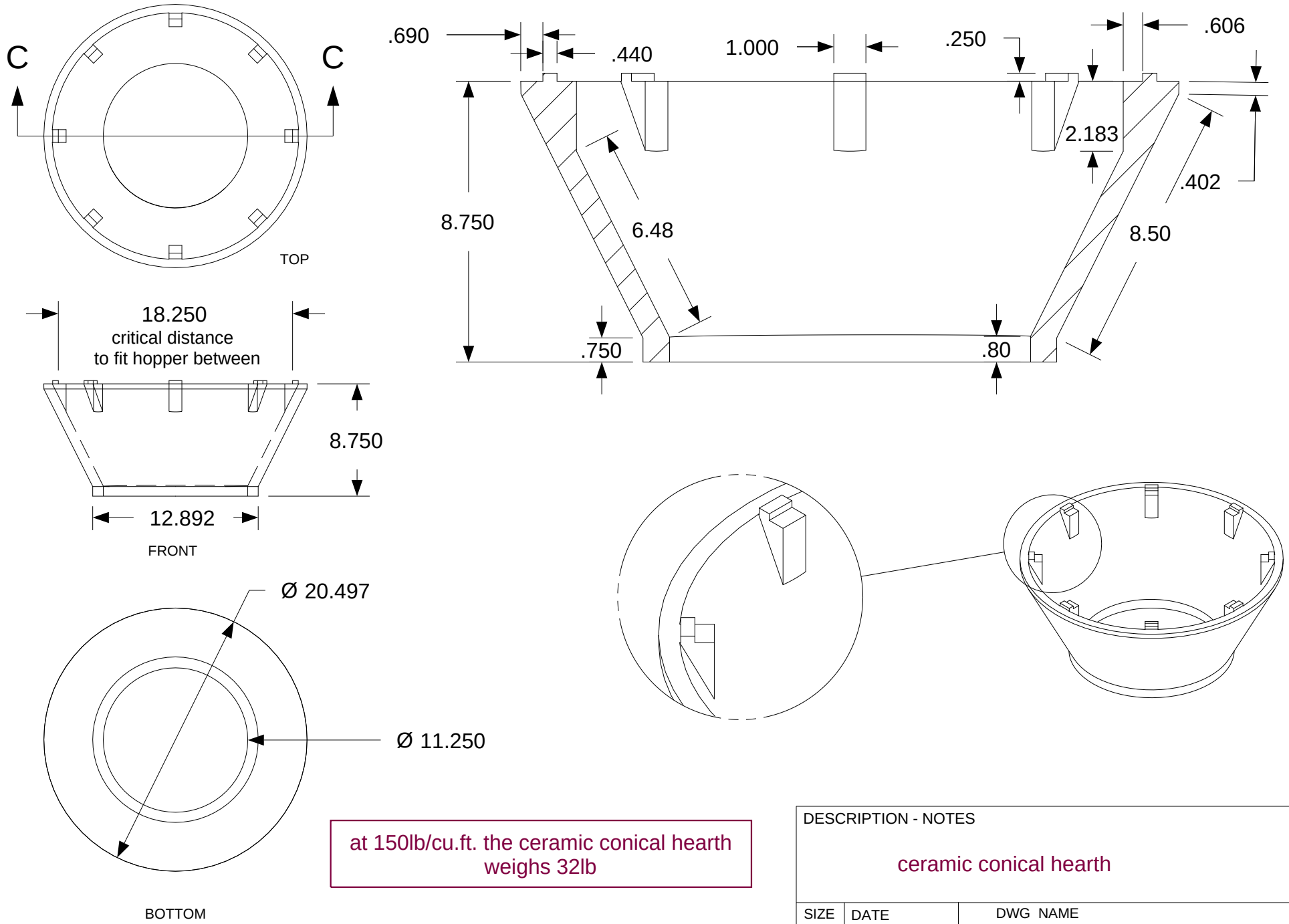

at 150lb/cu.ft. the ceramic conical hearth weighs 32lb

DESCRIPTION - NOTES			
ceramic conical hearth			
SIZE A	DATE 12/11/11	DWG NAME Refractory Ceramic Parts.icd	REV
SCALE	drawn by Larry Dobson		SHEET

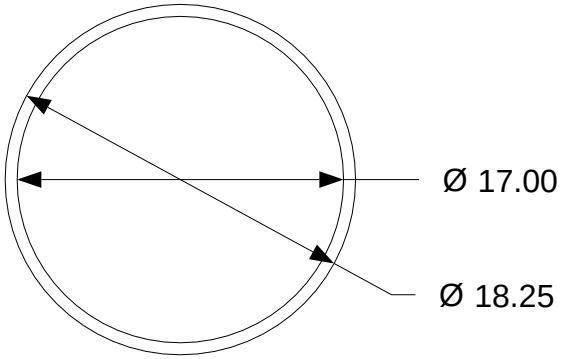

low-water low-cement vibrating castable ceramic is vibrated evenly into sheetmetal molds with a small concrete stinger moved around both sides of mold.

at 150lb/cu.ft. the ceramic hopper/air shell weighs 86lb

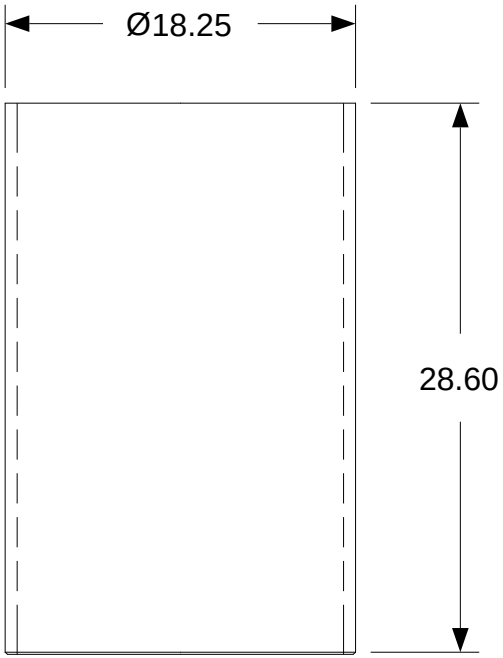

DESCRIPTION - NOTES			
ceramic hopper			
SIZE A	DATE 12/10/11	DWG NAME Refractory Ceramic Parts.icd	REV
SCALE	drawn by Larry Dobson		SHEET

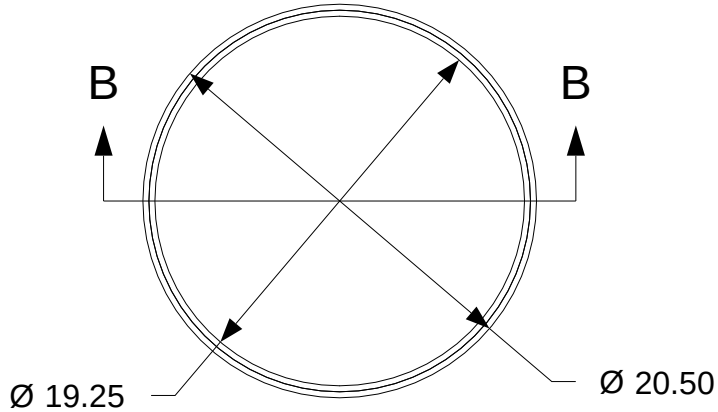

TOP

at 150lb/cu.ft. the ceramic air inner shell weighs 93lb

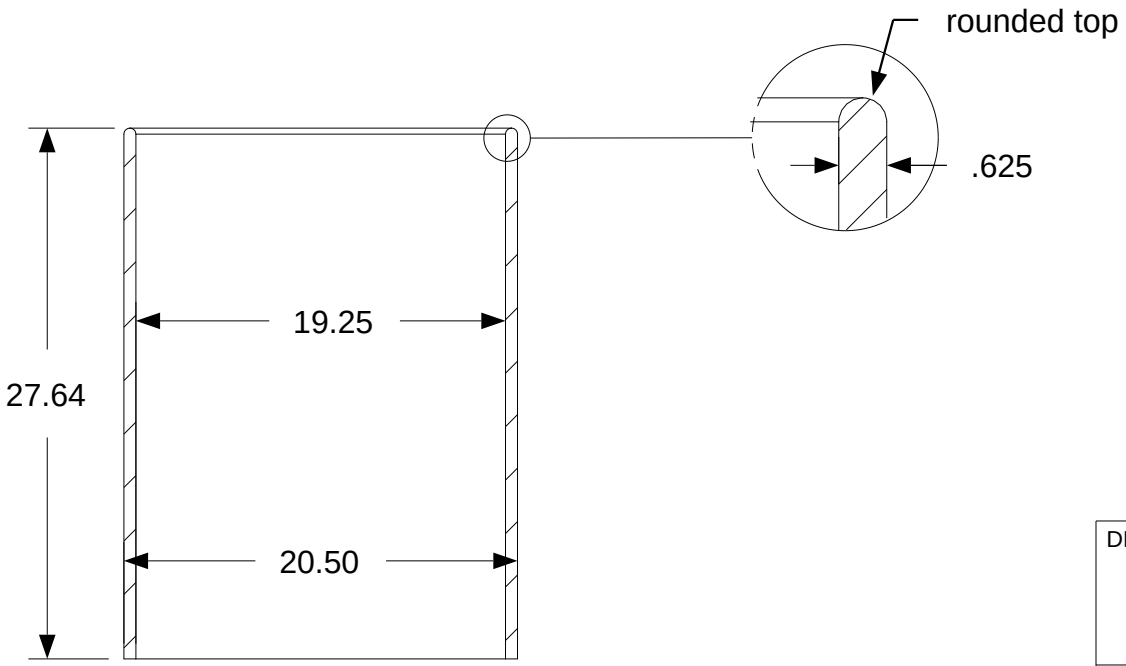

Section B-B

DESCRIPTION - NOTES			
ceramic air inner shell			
SIZE A	DATE 1/1/08	DWG NAME Refractory Ceramic Parts.icd	REV
SCALE	drawn by Larry Dobson		SHEET

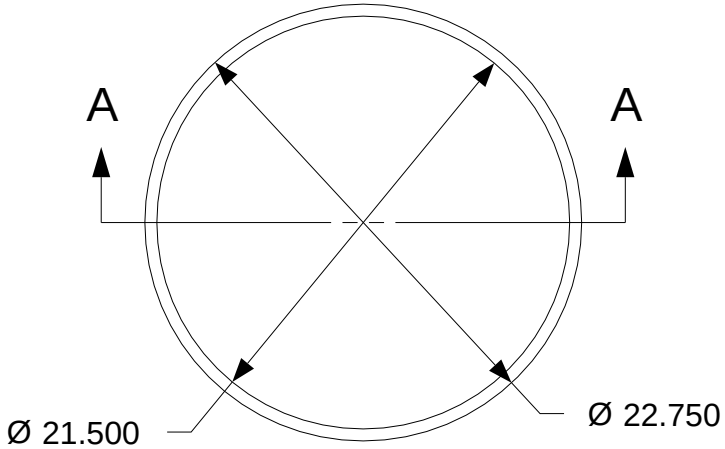

at 150lb/cu.ft. the ceramic combustor inner shell weighs 108lb

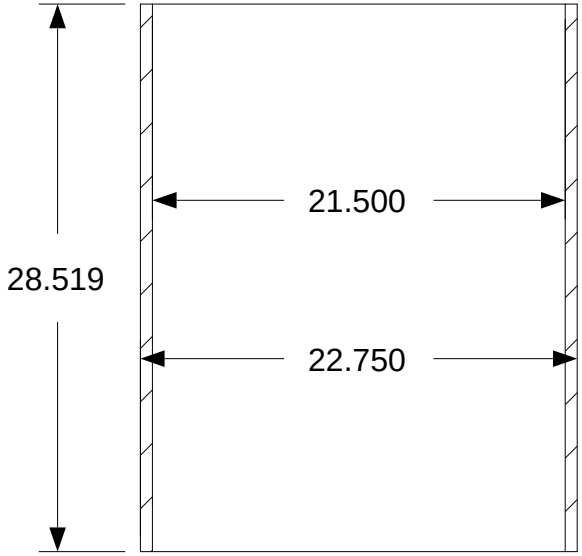

DESCRIPTION - NOTES			
ceramic combustor inner shell			
SIZE A	DATE 1/1/08	DWG NAME <double-click ~ drawing name>	REV
SCALE	drawn by Larry Dobson		SHEET

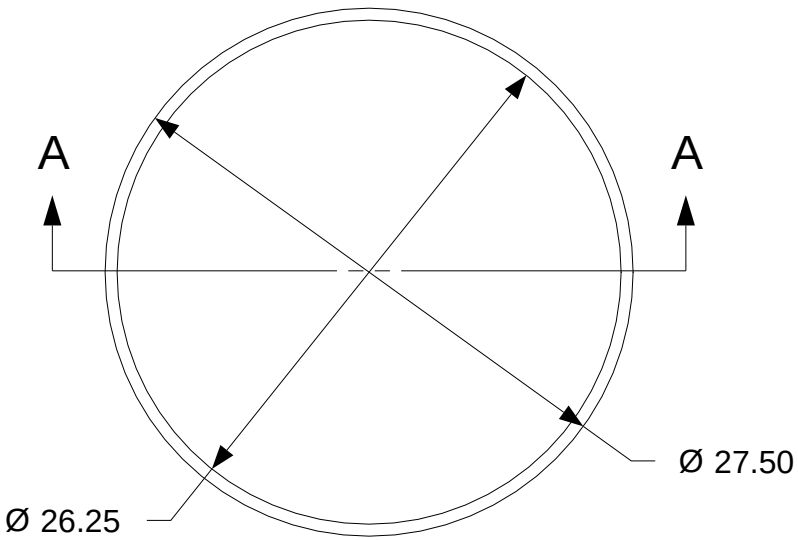

at 150lb/cu.ft. the ceramic combustor outer shell weighs 119lb

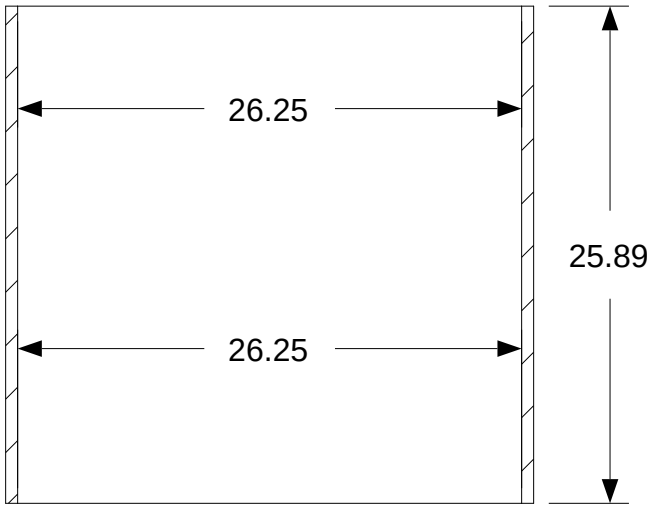

DESCRIPTION - NOTES			
ceramic combustor outer shell			
SIZE A	DATE 12/10/11	DWG NAME Refractory Ceramic Parts.icd	REV
SCALE	drawn by Larry Dobson		SHEET

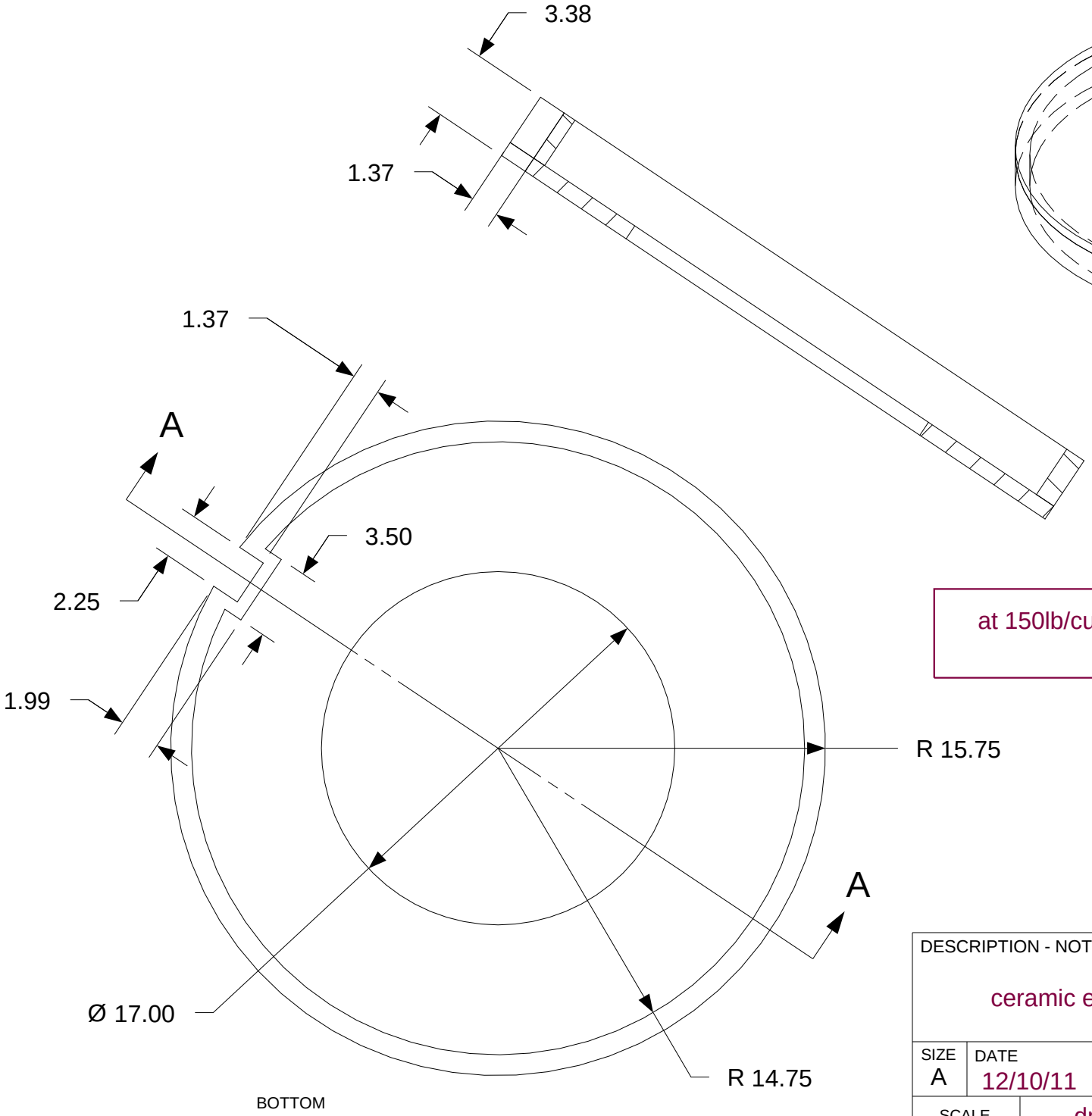

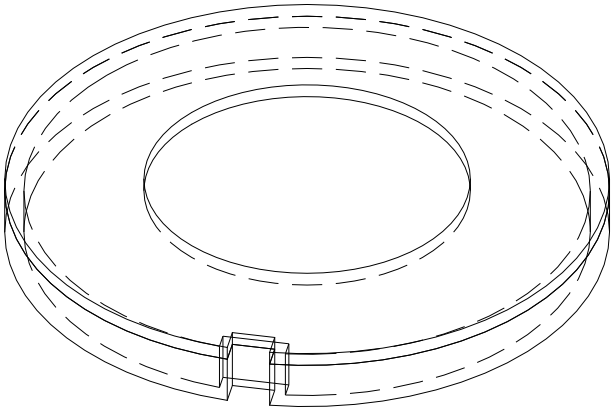

at 150lb/cu.ft. the ceramic exhaust transition lid weighs 58lb

DESCRIPTION - NOTES			
ceramic exhaust transition lid			
SIZE A	DATE 12/10/11	DWG NAME Refractory Ceramic Parts.icd	REV
SCALE	drawn by Larry Dobson		SHEET