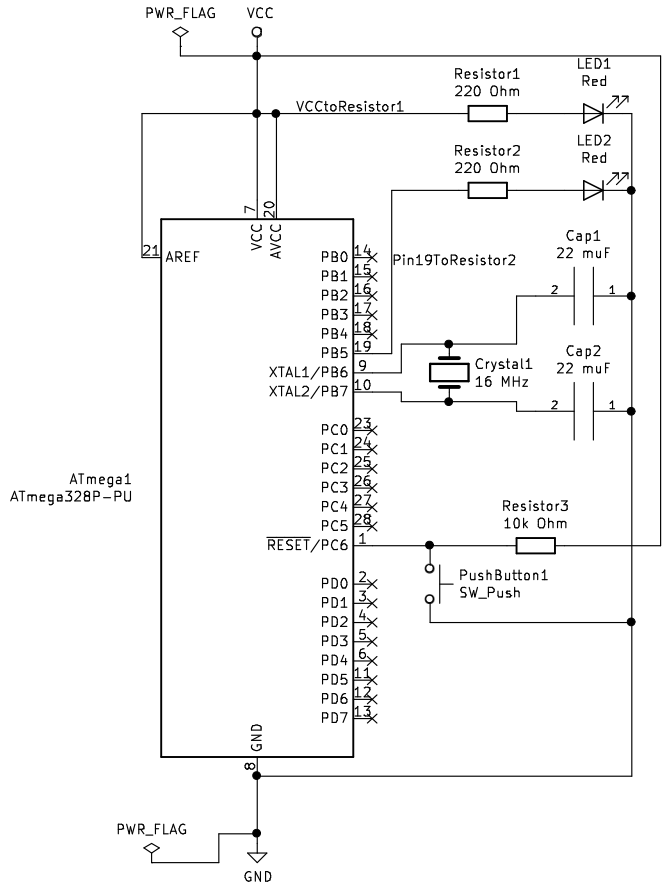

Sheet: /
File: arduino-board.sch

Title: Arduino

Size: A4	Date:	Rev:
KiCad E.D.A. kicad 5.1.5		Id: 1/1