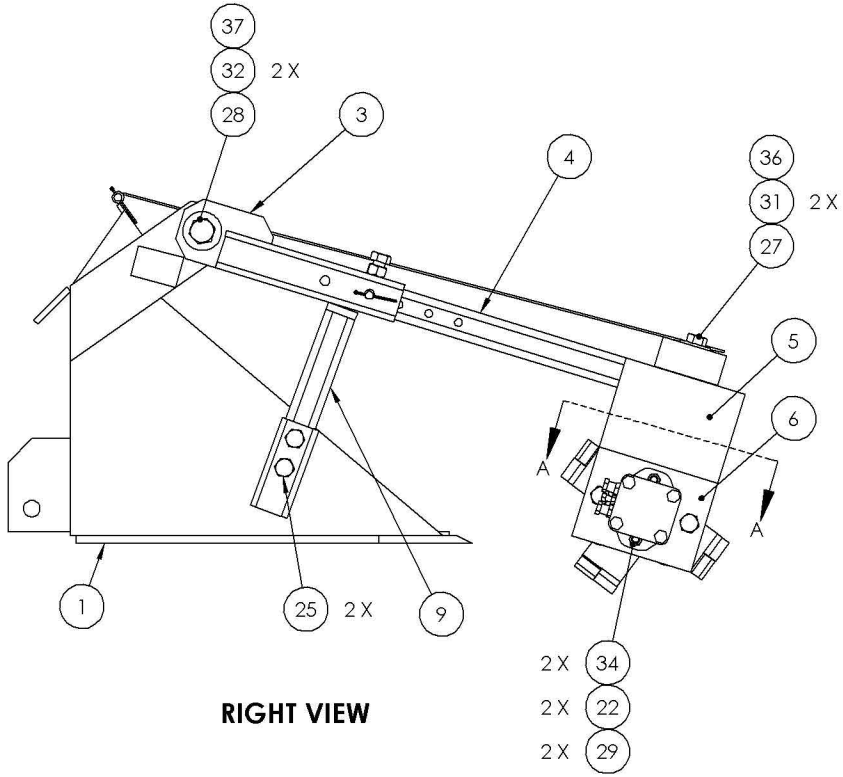

RIGHT VIEW

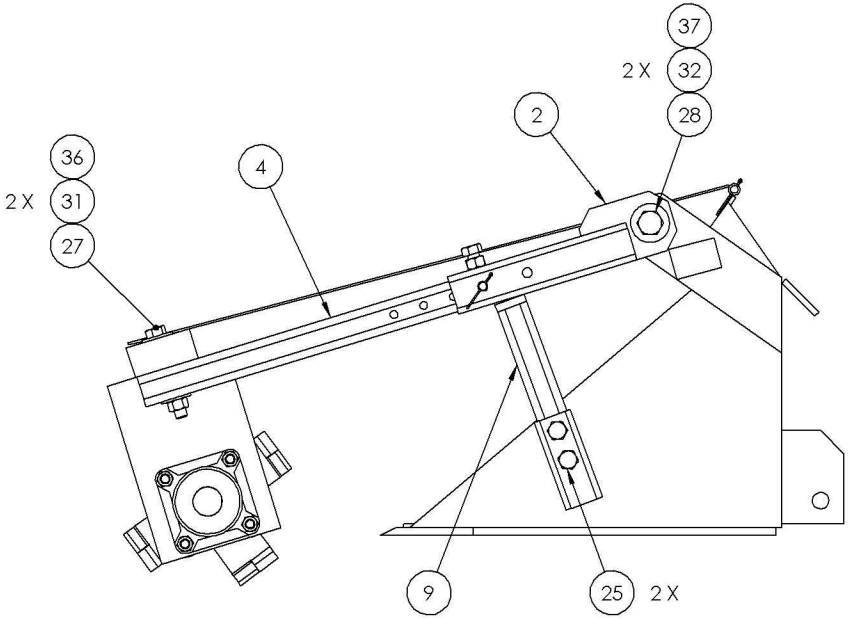

LEFT VIEW

SIZE	DWG. NO.	REV
B	100500	A
PULVERIZER	SCALE: NONE	SHEET 2 OF 3