ITEM NO.	PART NUMBER	DESCRIPTION	QTY.
1	100501	BUCKET WELDMENT	1
2	100515	PIVOT WELDMENT, LEFT	1
3	100518	PIVOT WELDMENT, RIGHT	1
4	100521	SMALL TUBE	2
5	100522	FRONT HOLDER WELDMENT	1
6	100527	PLATE, MOTOR MOUNT	1
7	100528	SHAFT	1
8	100529	TINE WELDMENT	12
9	100532	ARM REST WELDMENT	2
10	100543	COUPLER, WELDMENT	1
11	100538	ROD, HINGE	1
12	100539	ROD, PIN	2
13	100540	HINGE PIPE	8
14	100541	TOP PLATE	1
15	Motor	7.63 CU IN PTO DRIVE MOTOR	1
16	Bearing, FS210	BEARING, FS210	2
17	Shaft Collar	DOUBLE SPLIT SHAFT COLLAR- 1-7/8"	1
18	CP-125X2500	COTTER PIN, 1/8 X 2 1/2	6
19	SAE 10M to 0.5NPTF	FITTING, SAE 10M TO 1/2"NPTF SWIVEL	2
20	SAE 4M to 0.25NPTF Swivel	FITTING, SAE 4M TO 1/4"NPTF SWIVEL	1
21	HBOLT 0.3750-16x3x3-C	HBOLT 0.3750-16x3x3	1
22	HBOLT 0.5000-13x2.5x2.5	HBOLT 0.5000-13x2.5x2.5	2
23	HBOLT 0.6250-11x1.75x1.75-C	HBOLT 0.6250-11x2x2	8
24	HBOLT 0.7500-10x1.25x1.25	HBOLT 0.7500-10x1.25x1.25	14
25	HBOLT 0.7500-10x1.5x1.5-N	Bolt, HHCS, 0.75"-10x1.5"x1.5"	4
26	HBOLT 0.7500-10x2x2-C	Bolt, HHCS, 0.75"-10x2"x2"	2
27	HBOLT 0.7500-10x5.5x1.75-C	Bolt, HHCS, 0.75"-10x5.5"x1.75"	2
28	HBOLT 1.0000-8x3x2.25-C	Bolt, HHCS, 1.0"-8x3"x2.25"	2
29	Preferred Wide FW 0.5	Washer, Wide, 0.5"	2
30	Preferred Wide FW 0.625	Washer, 0.625" Wide	8
31	WASHER 0.7500-WIDE	Washer, Wide, 0.75"	6
32	WASHER 1.000-WIDE	Washer, Wide,1.0"	4
33	HNUT 0.3750-16-D-C	Nut, Hex, 0.375"-16	1
34	HNUT 0.5000-13-D-C	Nut, Hex, 0.5"-13	2
35	HNUT 0.6250-11-D	HNUT 0.6250-11-D	8
36	HNUT 0.7500-10-D	Nut, Hex, 0.75"-10	4
37	HNUT 1.0000-8-D-C	Nut, Hex, 1"-8	2

NOTES:

1. IN ONLY ONE PART IS VIEWABLE, BUT THERE IS A MULTIPLIER BESIDES THE FIND NUMBE R(FN) THEN IT IS IMPLIED THAT THE PART ARE SYMETRIC ON THE OTHER SIDE.

2. TO ATTACH THE TOP PLATE (FN 26) TO THE BUCKET WELDMENT (FN 1) FIRST PLACE ALL 8X HINGE PIPES (FN 25) ON HINGE ROD (FN 14). LAY THE TOP PLATE ON THE FLOOR AND POSITION ROD WITH HINGE PIPES ON IT NEXT TO IT AND WELD FOUR OF THE HINGE PIPES TO THE COVER PLATE APPROXIMATELY POSITIONED AS SHOWN ON SHEET 3.

3. POSITION TOP PLATE (FN 26) WITH WELDED ON HINGE PIPE AND ROD AND POSITION ON BUCKET WELDMENT. WELD REMAINIG 4 HINGE PIPES (FN 25) TO BUCKET WELDMENT.

4. HYDRAULIC HOSES AND QUICK CONNECT HYDRAULIC COUPLINGS ARE NOT SHOWN IN IN THIS DRAWING OR BOM.

5. THREAD LOCKER SUCH AS LOCTITE IS RECOMMENDED FOR ALL BOLTED CONNECTIONS

6. NYLON NUT SHOULD BE USED FOR FN 37 SO THAT JOINT CAN BE LEFT SLIGHTLY LOOSE.

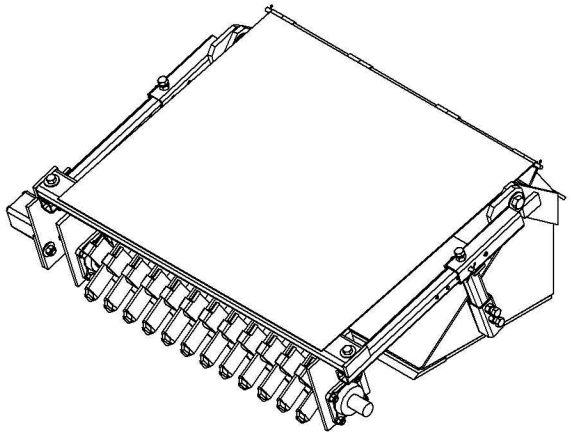

open source ecology

LICENSE INFORMATION
ALL INFORMATION IS RELEASED UNDER THE OSE LICENSE FOR DISTRIBUTIVE ECONOMICS. FOR FURTHER INFORMATION GO TO:
OPENSOURCEECOLOGY.ORG/WIKI/LICENSE

	NAME	DATE
DRAWN	MA	2011-12-22
CHECKED		YYYY/MM/DD
APPR.		YYYY/MM/DD

UNLESS OTHERWISE SPECIFIED DIMENSIONS ARE IN INCHES

ANGLES	.X	.XX	.XXX
± .5	± .1	± .03	± .005

THIRD ANGLE PROJECTION

PROJECT: PULVERIZER

DESCRIPTION:

SOIL PULVERIZER ASSEMBLY

SIZE	DWG. NO.	REV
B	100500	A

SCALE: NONE | WEIGHT: XX.XLBS | SHEET 1 OF 3