NOTES:

1. MATERIAL:
   ASTM A36 STEEL

2. MAKE APPROX 1" CUT IN MIDDLE OF FLAT
   AND BEND EACH SIDE 45DEG

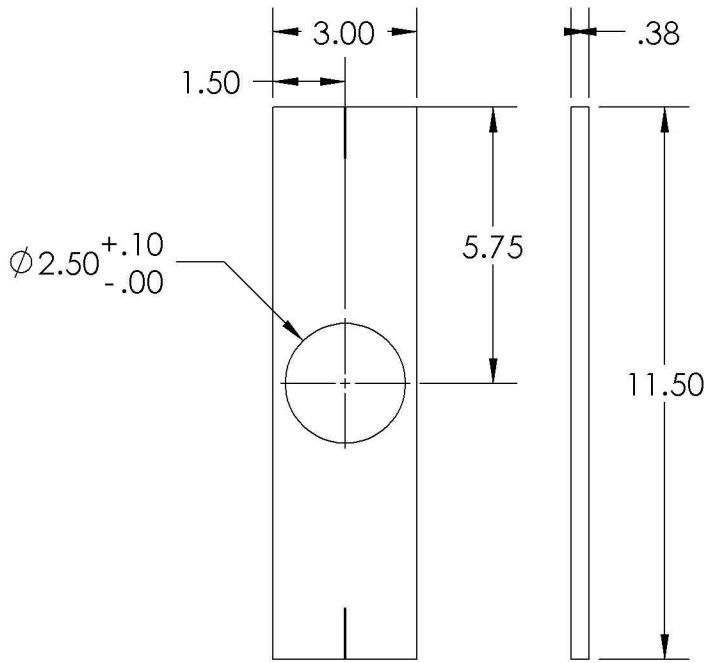

FLAT PATTERN

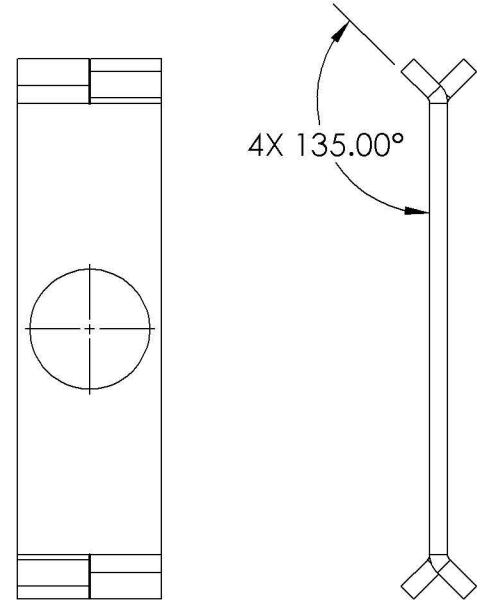

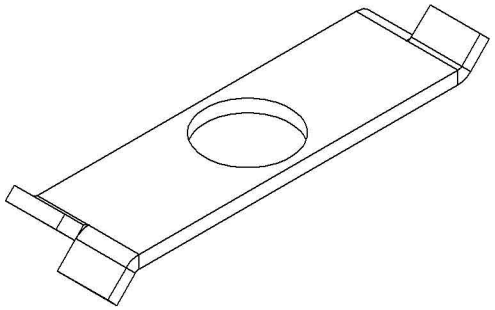

open source ecology

LICENSE INFORMATION

ALL INFORMATION IS RELEASED UNDER THE OSE LICENSE FOR DISTRIBUTIVE ECONOMICS. FOR FURTHER INFORMATION GO TO:

OPENSOURCEECOLOGY.ORG/WIKI/LICENSE

	NAME	DATE
DRAWN	MA	2011-12-22
CHECKED		YYYY/MM/DD
APPR.		YYYY/MM/DD

UNLESS OTHERWISE SPECIFIED DIMENSIONS ARE IN INCHES

ANGLES	.X	.XX	.XXX
± .5	± .1	± .03	± .005

THIRD ANGLE PROJECTION

PROJECT:
PULVERIZER

DESCRIPTION:
TINE

SIZE	DWG. NO.	REV
A	100542	A

SCALE: NONE | WEIGHT: 3.14LBS | SHEET 1 OF 1

5 4 3 2 1