NOTES:

1. FILL WELD TINES (FN 2) TO PIPE (FN 1)
   ALL AROUND AND TO EACHOTHER

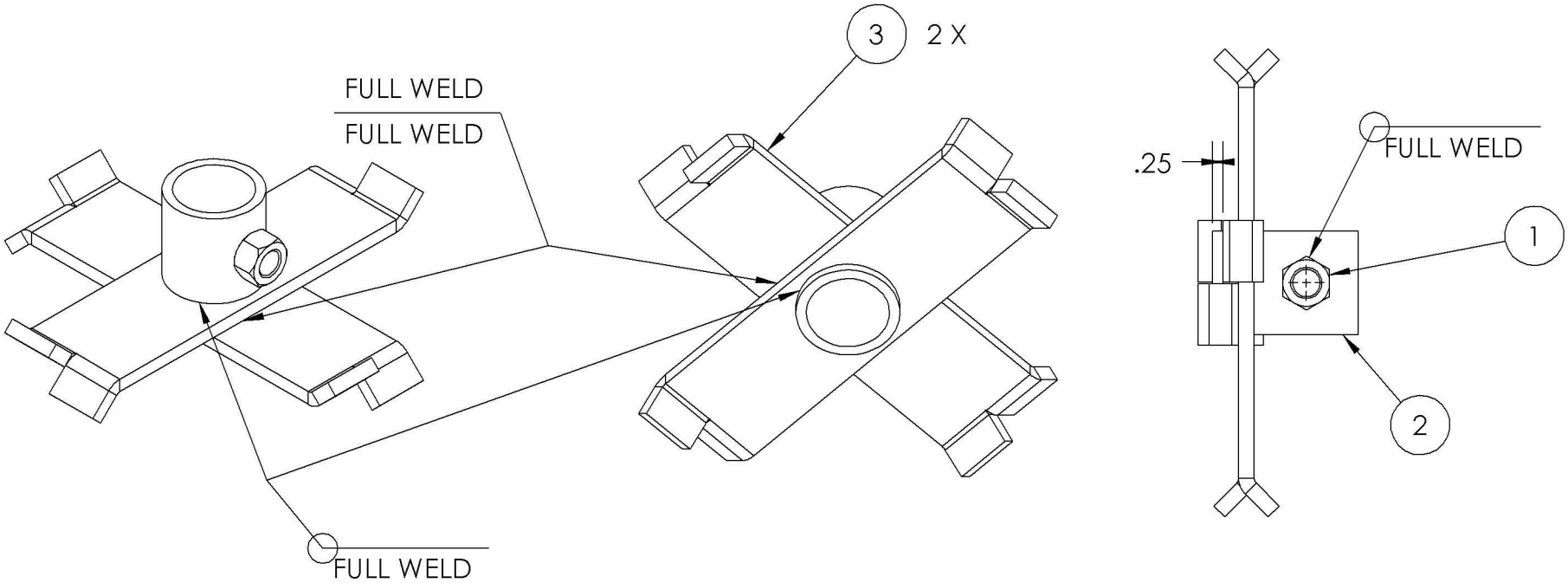

ITEM NO.	PART NUMBER	DESCRIPTION	QTY.
1	HNUT 0.7500-10-D-Steel	Nut, Hex, Steel, 0.75"x10	1
2	100530	TUBE, TINE	1
3	100542	TINE	2

open source ecology

LICENSE INFORMATION

ALL INFORMATION IS RELEASED UNDER THE OSE LICENSE FOR DISTRIBUTIVE ECONOMICS. FOR FURTHER INFORMATION GO TO:

OPENSOURCEECOLOGY.ORG/WIKI/LICENSE

	NAME	DATE
DRAWN	MA	2011-12-22
CHECKED		YYYY/MM/DD
APPR.		YYYY/MM/DD

UNLESS OTHERWISE SPECIFIED DIMENSIONS ARE IN INCHES

ANGLES	.X	.XX	.XXX
± .5	± .1	± .03	± .005

THIRD ANGLE PROJECTION

PROJECT: PULVERIZER

DESCRIPTION:

TINE WELDMENT

SIZE	DWG. NO.	REV
A	100529	A

SCALE: NONE | WEIGHT: 8.02LBS | SHEET 1 OF 1

5 4 3 2 1