NOTES:

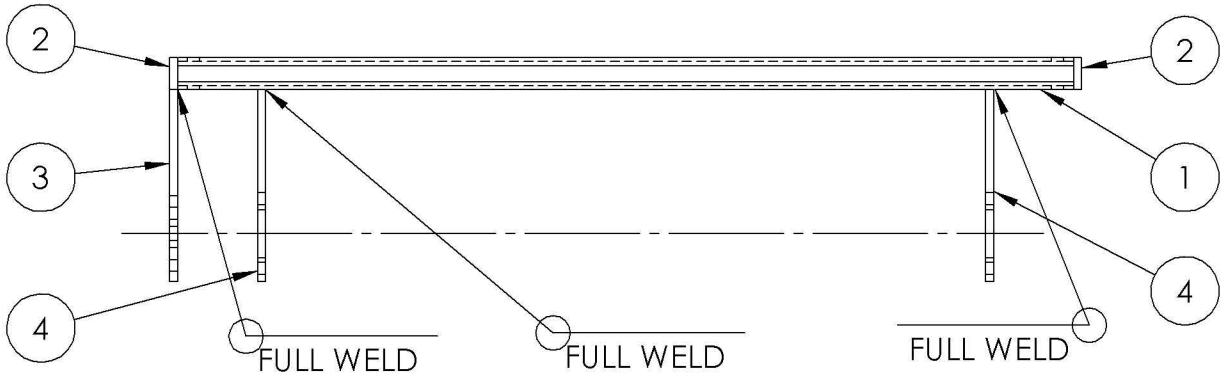

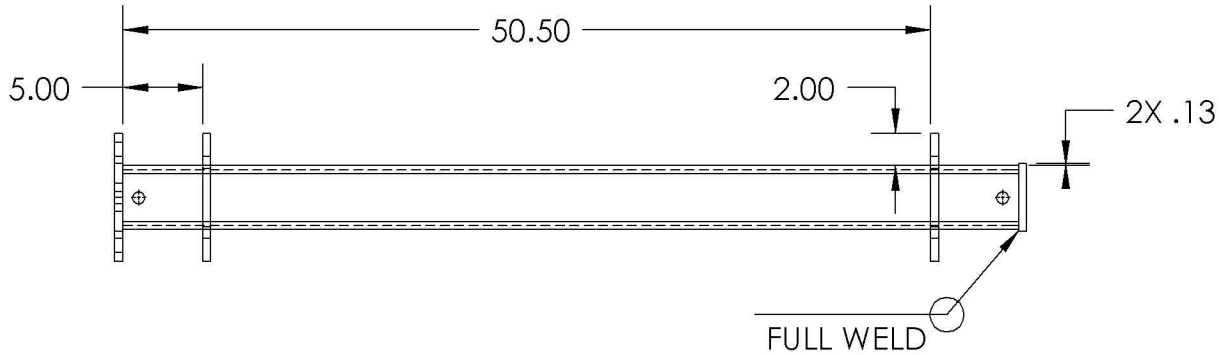

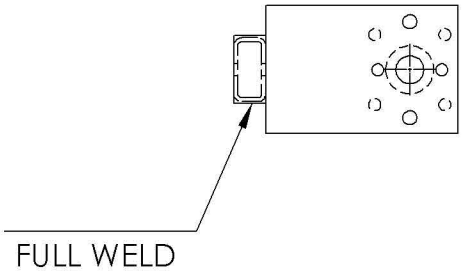

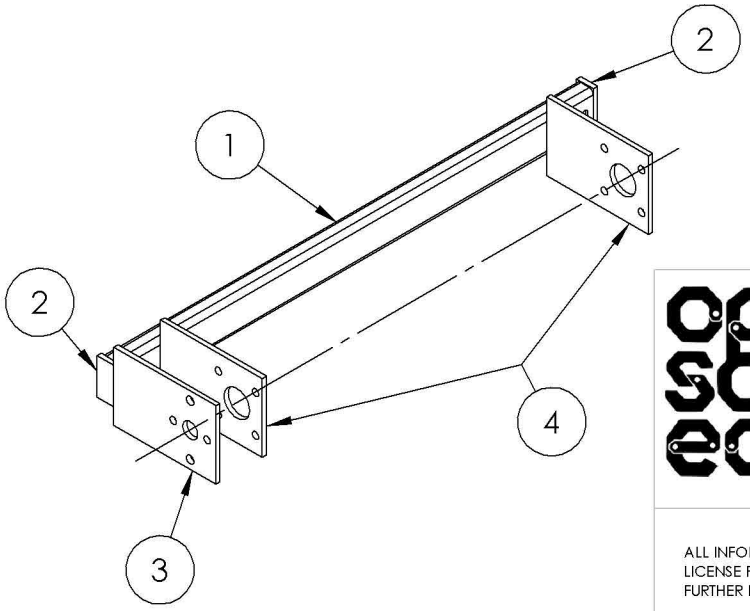

ITEM NO.	PART NUMBER	DESCRIPTION	QTY.
1	100523	CROSS TUBE	1
2	100524	END PLATE, CROSS TUBE	2
3	100525	PLATE, MOTOR END	1
4	100526	PLATE, BEARING	2

open source ecology

LICENSE INFORMATION

ALL INFORMATION IS RELEASED UNDER THE OSE LICENSE FOR DISTRIBUTIVE ECONOMICS. FOR FURTHER INFORMATION GO TO:

OPENSOURCEECOLOGY.ORG/WIKI/LICENSE

	NAME	DATE
DRAWN	MA	2011-12-22
CHECKED		YYYY/MM/DD
APPR.		YYYY/MM/DD

UNLESS OTHERWISE SPECIFIED DIMENSIONS ARE IN INCHES

ANGLES	.X	.XX	.XXX
± .5	± .1	± .03	± .005

THIRD ANGLE PROJECTION

PROJECT: PULVERIZER

DESCRIPTION:

FRONT HOLDER WELDMENT

SIZE	DWG. NO.	REV
A	100522	A

SCALE: NONE | WEIGHT: 81.1LBS | SHEET 1 OF 1

5 4 3 2 1