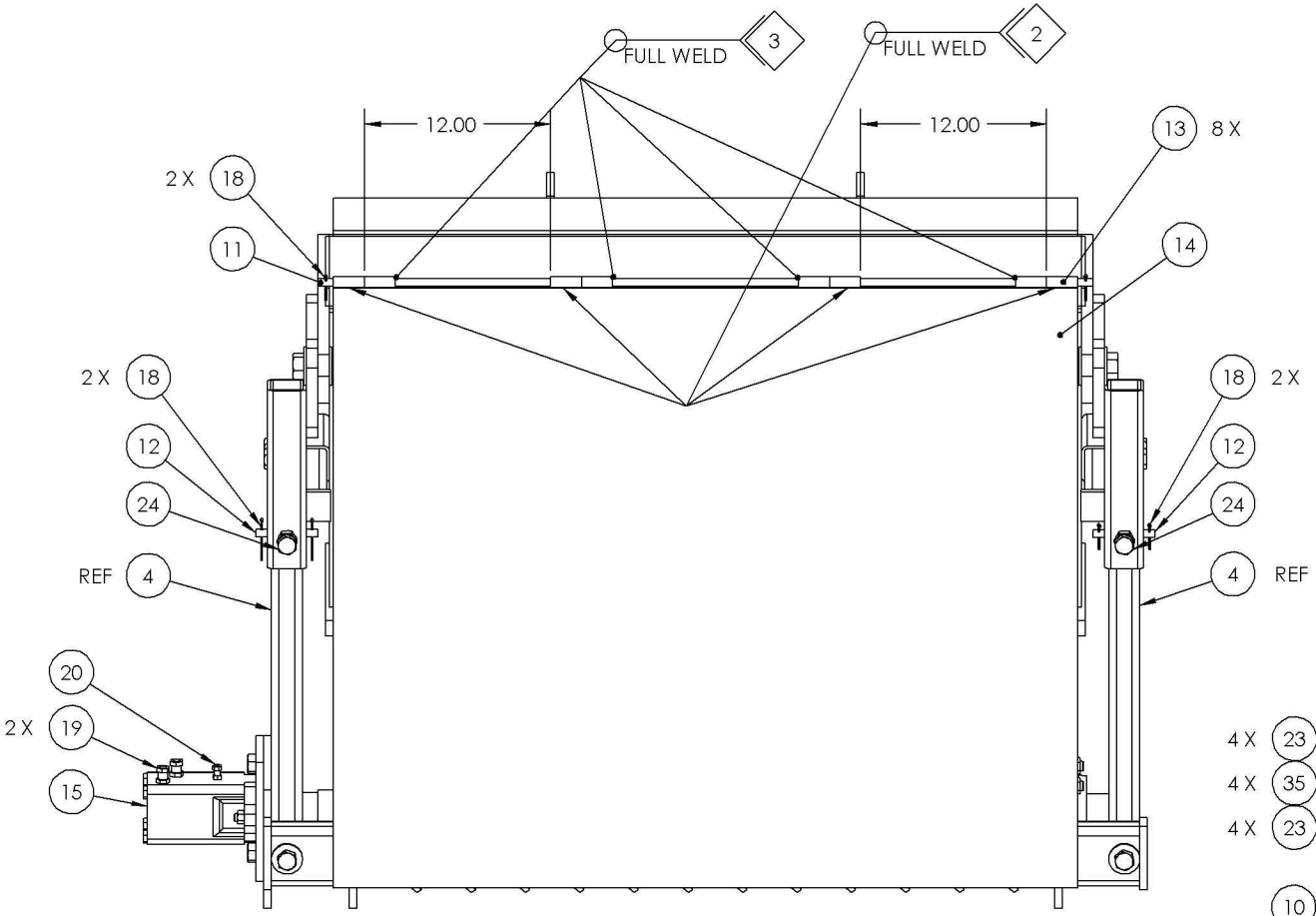

TOP VIEW

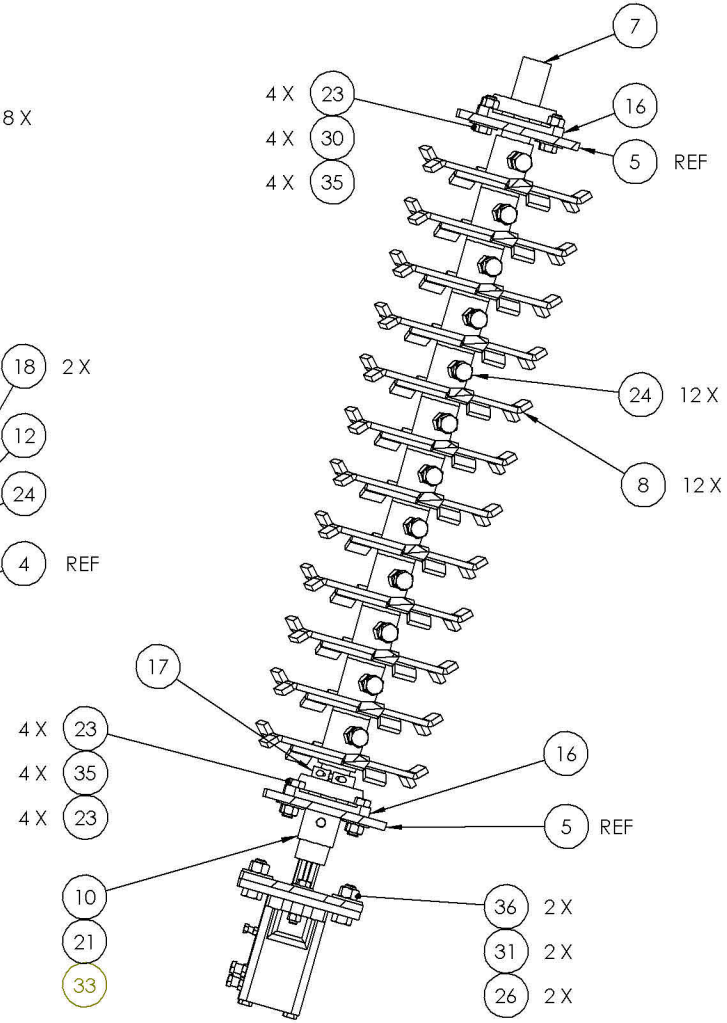

SECTION A-A
SCALE 1 : 8

SIZE	DWG. NO.	REV
B	100500	A
PULVERIZER	SCALE: NONE	SHEET 3 OF 3