NOTES:

1. MATERIAL:
   ASTM A36 STEEL
   PIPE ID 1-7/8" X OD 2-3/8" X 2.5"

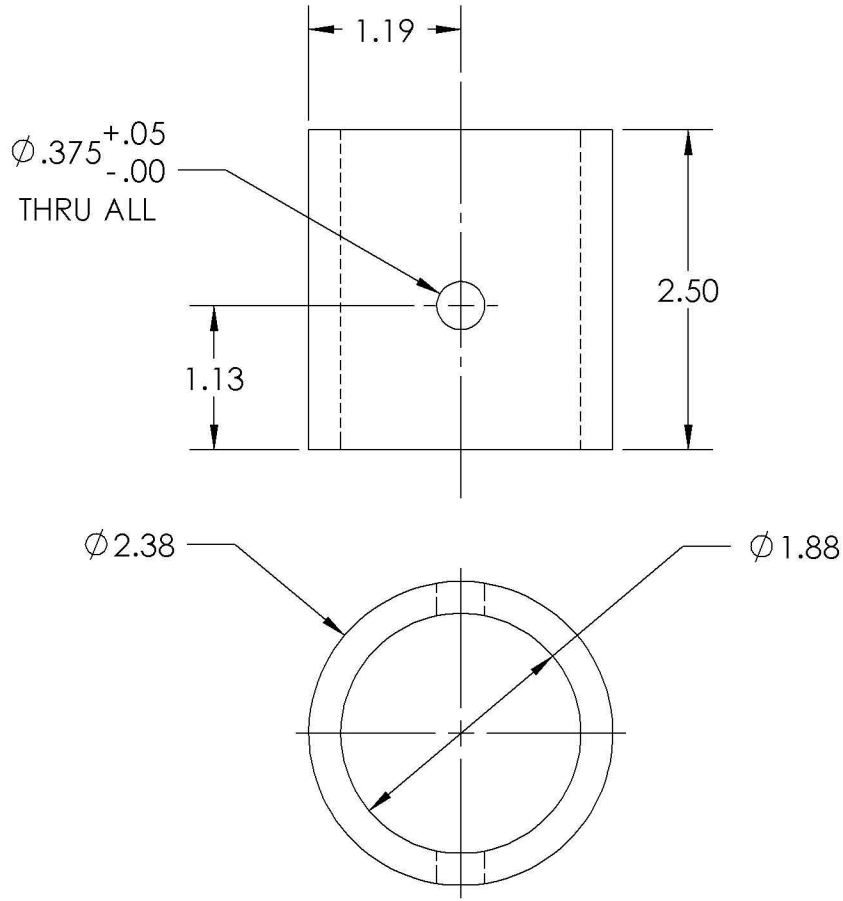

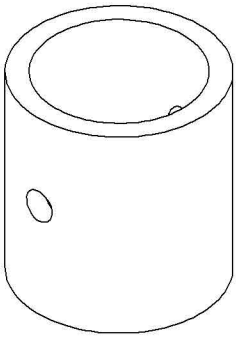

open source ecology

LICENSE INFORMATION

ALL INFORMATION IS RELEASED UNDER THE OSE LICENSE FOR DISTRIBUTIVE ECONOMICS. FOR FURTHER INFORMATION GO TO:

OPENSOURCEECOLOGY.ORG/WIKI/LICENSE

	NAME	DATE
DRAWN	MA	2011-12-22
CHECKED		YYYY/MM/DD
APPR.		YYYY/MM/DD

UNLESS OTHERWISE SPECIFIED DIMENSIONS ARE IN INCHES

ANGLES	.X	.XX	.XXX
± .5	± .1	± .03	± .005

THIRD ANGLE PROJECTION

PROJECT:
PULVERIZER

DESCRIPTION:
COUPLER, SHAFT SIDE

SIZE	DWG. NO.	REV
A	100545	A

SCALE: NONE | WEIGHT: 1.03LBS | SHEET 1 OF 1

5 4 3 2 1