NOTES:

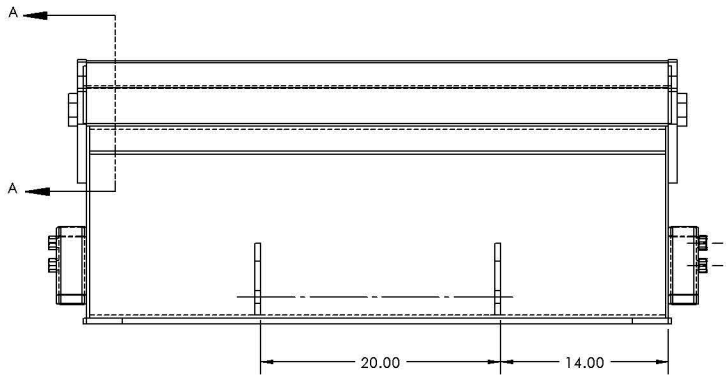

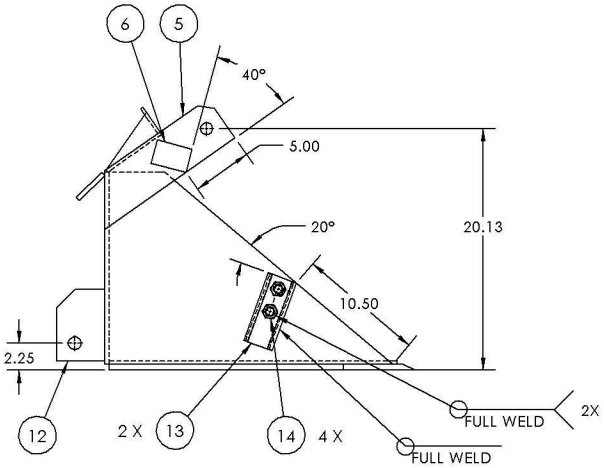

REPEAT LOCATION AND WELD OF
ITEM NO. 5, 6, 13, 14 ON OPPOSITE SIDE

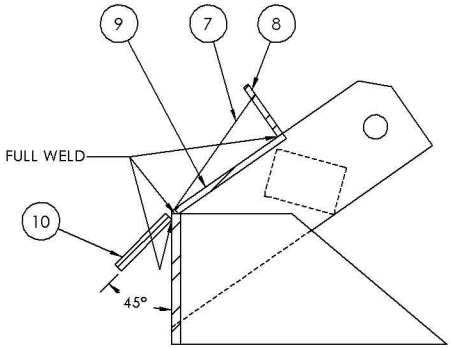

SECTION A-A
SCALE 1 : 4

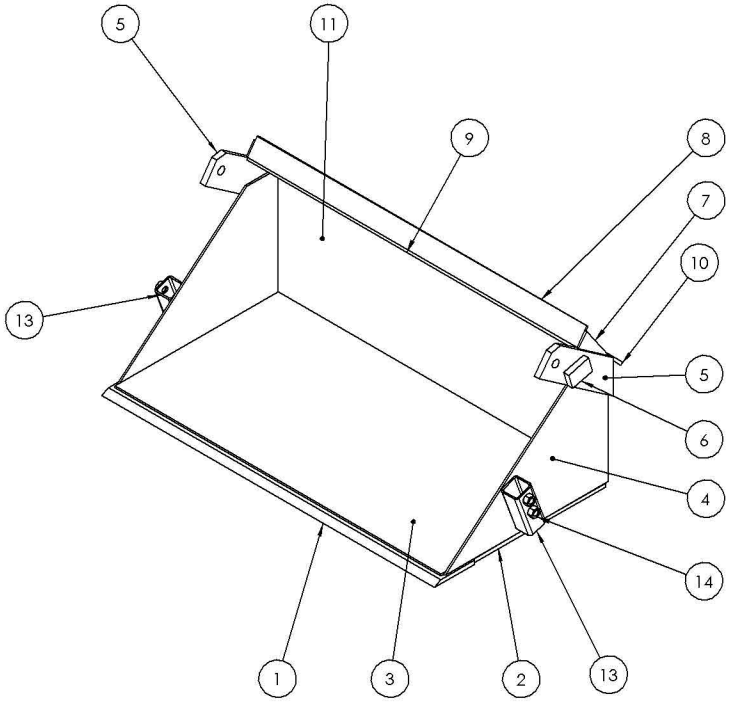

ITEM NO.	PART NUMBER	DESCRIPTION	QTY.
1	100502	BLADE	1
2	100503	SKID PLATE	2
3	100504	BOTTOM PLATE	1
4	100505	SIDE PLATES	2
5	100506	SIDE BRACE PLATE	2
6	100507	HARD STOP PLATE	2
7	100508	TRIANGLE PLATE	2
8	100509	CROSS SUPPORT PLATE	1
9	100510	CROSS SUPPORT PLATE LOWER	1
10	100511	REAR MOUNTING PLATE	1
11	100512	BACK PLATE	1
12	100513	BOTTOM MOUNTING PLATES	2
13	100514	LARGE TUBE, ANGLED	2
14	HNUT 0.7500-10-D-Steel	Nut, Hex, Steel, 0.75"x10	4

open source ecology

	NAME	DATE
DRAWN		YYYY/MM/DD
CHECKED		YYYY/MM/DD
APPR.		YYYY/MM/DD

UNLESS OTHERWISE SPECIFIED DIMENSIONS ARE IN INCHES

ANGLES	.X	.XX	.XXX
± .5	± .1	± .03	± .005

THIRD ANGLE PROJECTION

LICENSE INFORMATION
ALL INFORMATION IS RELEASED UNDER THE OSE LICENSE FOR DISTRIBUTIVE ECONOMICS. FOR FURTHER INFORMATION GO TO:
OPENSOURCEECOLOGY.ORG/WIKI/LICENSE

PROJECT: Pulverizer

DESCRIPTION: BUCKET WELDMENT

SIZE C | DWG. NO. 100501 | REV A

SCALE: NONE | WEIGHT: XX.XLBS | SHEET 1 OF 2