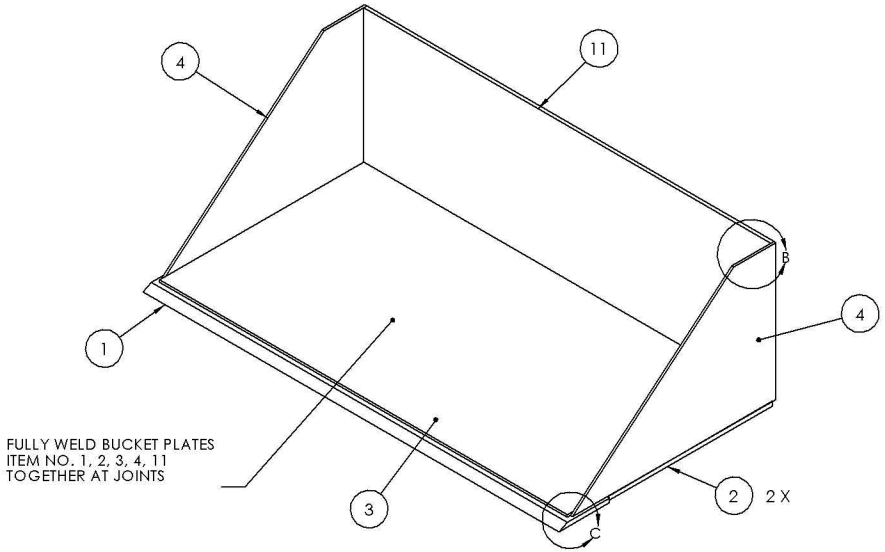

ISO VIEW
(ITEMS REMOVED FOR CLARITY)

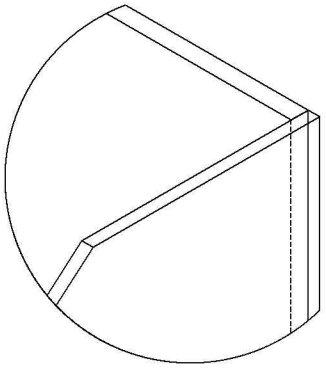

DETAIL B
SCALE 1 : 1.5

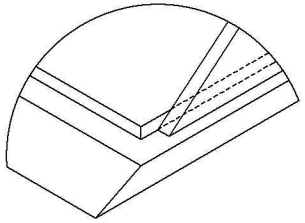

DETAIL C
SCALE 1 : 1.5

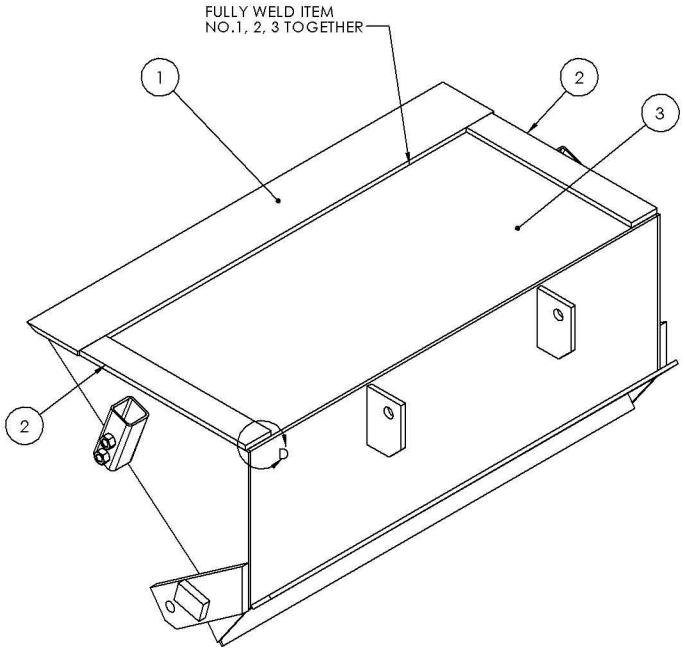

ISO VIEW - BOTTOM

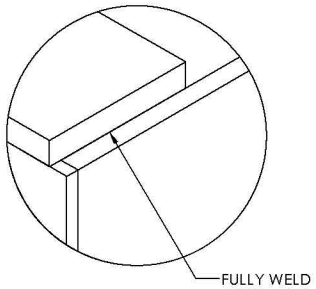

DETAIL D
SCALE 1 : 1.5

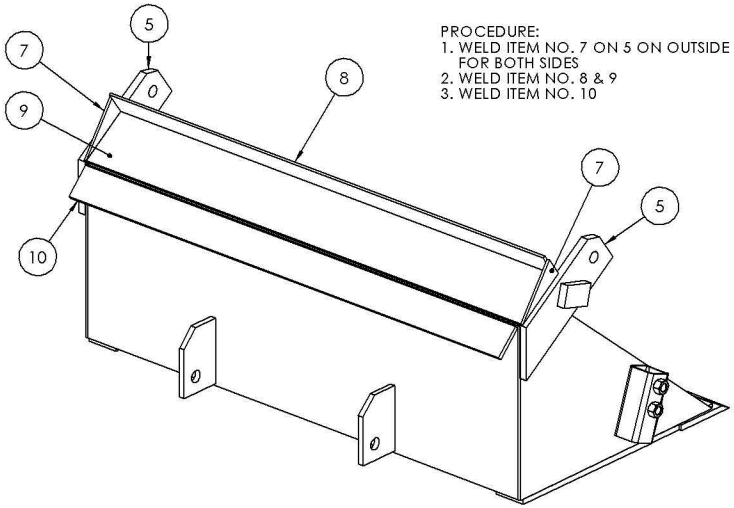

PROCEDURE:
1. WELD ITEM NO. 7 ON 5 ON OUTSIDE ONLY FOR BOTH SIDES
2. WELD ITEM NO. 8 & 9
3. WELD ITEM NO. 10

ISO VIEW - REAR

SIZE	DWG. NO.	REV
C	100501	A
PULVERIZER	SCALE: NONE	SHEET 2 OF 2