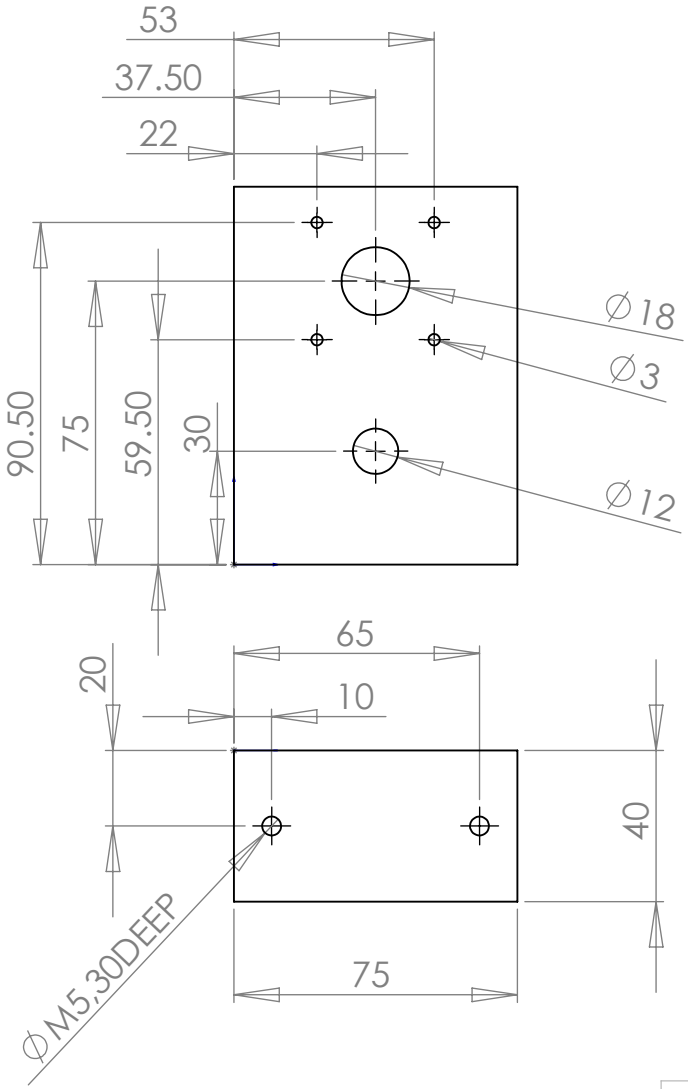

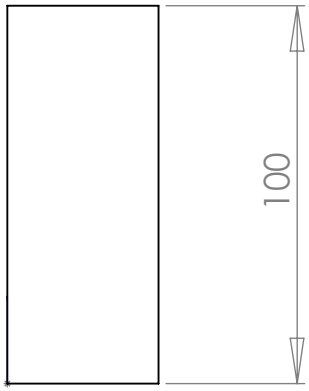

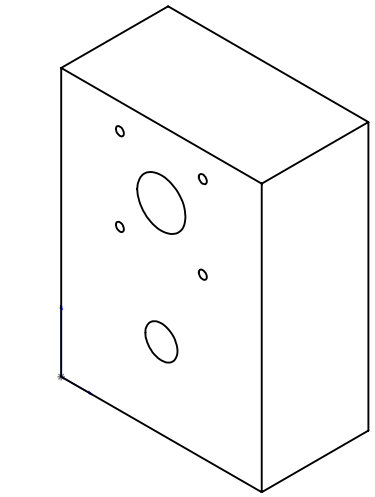

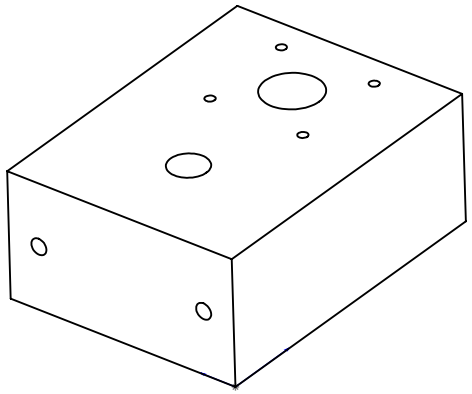

open source ecology

LICENSE INFORMATION

ALL INFORMATION IS RELEASED UNDER THE OSE LICENSE FOR DISTRIBUTIVE ECONOMICS. FOR FURTHER INFORMATION GO TO:

OPENSOURCEECOLOGY.ORG/WIKI/LICENSE

	NAME	DATE
DRAWN		YYYY/MM/DD
CHECKED		YYYY/MM/DD
APPR.		YYYY/MM/DD

UNLESS OTHERWISE SPECIFIED DIMENSIONS ARE IN MILLIMETRES

ANGLES	.X	.XX	.XXX
± .5	± .1	± .03	± .005

THIRD ANGLE PROJECTION

PROJECT:

DESCRIPTION:

SIZE	DWG. NO.	REV
A	XMajorBlock	A

SCALE: NONE | WEIGHT: XX.XKG | SHEET 1 OF 1

5 4 3 2 1